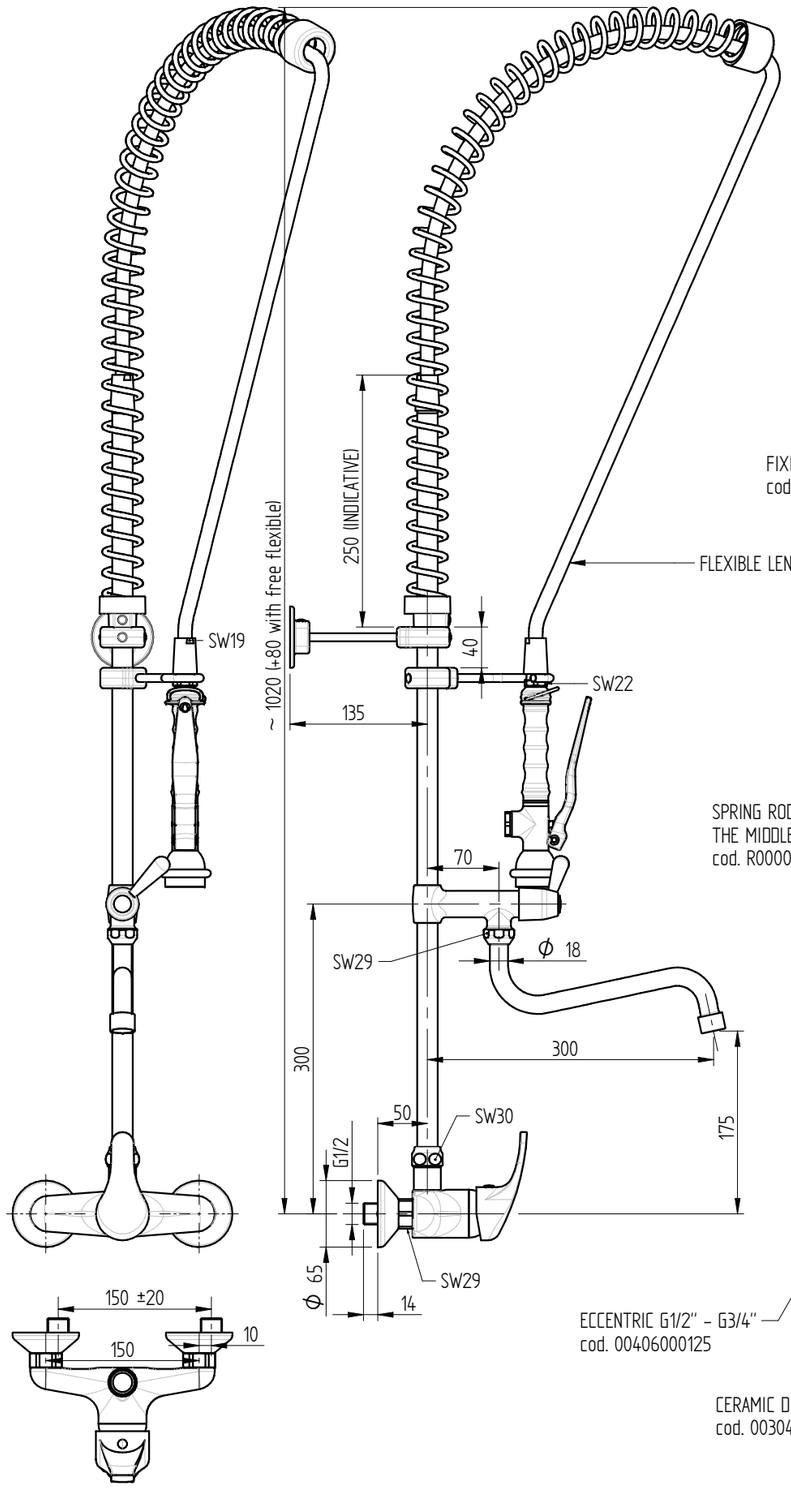

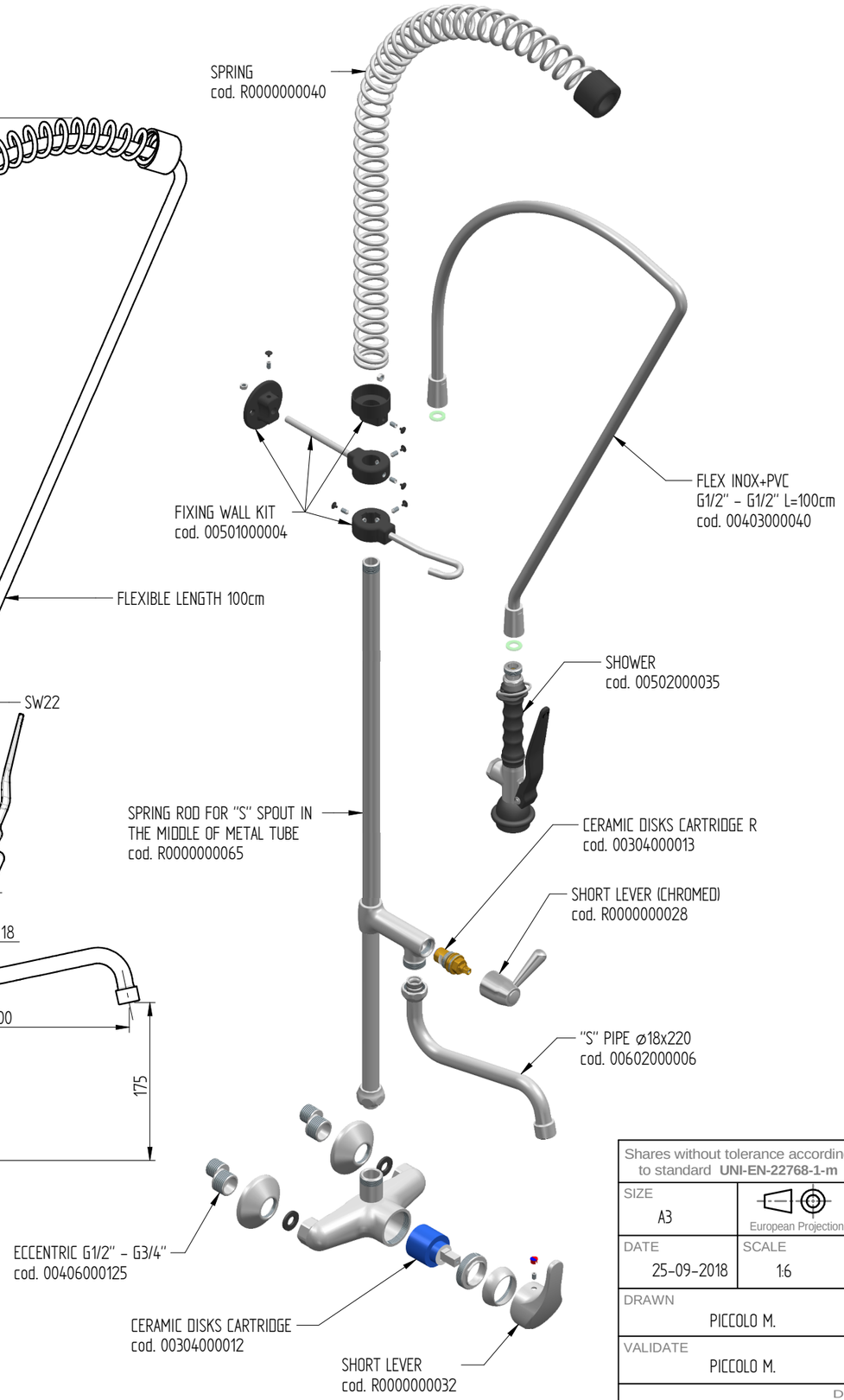

FLOW RATE : 12 L/min at 3,5 BAR only from the shower
14 L/min at 3,5 Bar onlly from the spout
18 L/min at 3,5 BAR when both + spout are open

Shares without tolerance according to standard **UNI-EN-22768-1-m**	DESCRIPTION TWO HOLES PRE-RINSE UNIT MIXER WALL MOUNTED WITH SPOUT IN THE MIDDLE OF TUBE, SHORT CHROMED LEVER AND BASIC SHOWER HAND. 150mm WHEELBASE WITH ±20mm TOLERANCE	CODE R0102010302
SIZE A3 — European Projection		WEIGHT 4,39 Kg
DATE 25-09-2018	SCALE 1:6	MONOLITH DESIGN AND TECHNOLOGICAL RESEARCH FOR WATER
DRAWN PICCOLO M.		
VALIDATE PICCOLO M.		VIA DELL'ARTIGIANO 8/F-8-G , 31050 MONASTIER di TREVISO (TV) tel: 0422 842157 - fax: 0422 708978

DONE WITH DESIGN CAD - PROHIBITED THE CHANGES MANUAL

Rev. 01 - 15/04/2022